Networkable VAV Controller

Specification and Installation Instructions

Models

EVCB14NIT0S	*(0 TRIACS / pressure independent)*
EVCB14NIT2S	*(2 TRIACS / pressure independent)*
EVCB14NIT4S	*(4 TRIACS / pressure independent)*
EVCB14NIT4X*	*(4 TRIACS / independent / external motor)*
EVCB14NDT4X*	*(4 TRIACS / dependent / external motor)*
EVCB14NDT4S	*(4 TRIACS / pressure dependent)*
EVCB14NIT0SF	*(0 TRIACS / independent / feedback)*
EVCB14NIT4SF	*(4 TRIACS / independent / feedback)*

** For use with either floating or modulating actuators*

TRL54	*(Thermostat 3x3)*

EVCB Series / TRL54

Description

The EVCB Series is a combination controller and thermostat with support for networked communications via the BACnet MS/TP or Modbus protocol. The Networkable VAV Controller is designed for simple and accurate control of any variable air volume box in a number of zone control configurations. Its field configurable algorithms enable versatile implementation of required control sequences.

Typical Application

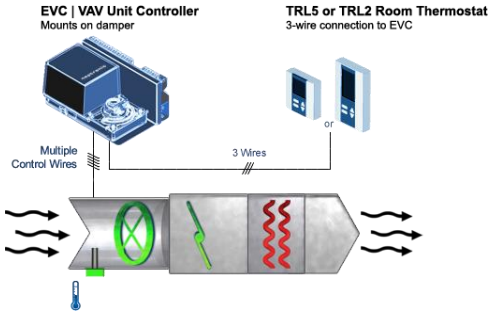

Applications

- Single duct, cooling only
- Single duct cooling and/or heating
- Up to 4 stage reheat and/or cool
- Up to 4 On/Off heat and/or cool
- Up to 4 time proportioned (TPM) heat or reheat
- Up to 2 analog (0-10Vdc) reheat and/or cool
- Up to 2 floating heat and/or cool
- Pressure dependent or pressure independent
- With or without auto changeover
- Supply/exhaust (requires an additional EVC)

Features

- Field configured VAV algorithms, inputs and outputs
- Built-in actuator, 70 lb-in. (select models, not available on EVCB14NIT4X and EVCB14NDT4X)
- Control external actuators using analog (0-10Vdc, adjustable) or floating signals with feedback (models EVCB14NIT4X and EVCB14NDT4X)
- On board differential pressure sensor (select models)
- Simple air balancing and commissioning via thermostat
- Automatically sets operation mode to pressure dependent or independent based on the presence of air flow
- Select direction on analog outputs
- Configurable PI (Proportional-Integral) function
- Independent, configurable proportional control band and dead band per ramp
- Selectable internal or external temperature sensor (10KΩ)
- External CO2 sensor input with integrated logic
- Changeover by contact or external temperature sensor
- Internal and external temperature sensor calibration
- Optional potentiometer feedback for increased precision of actuator position
- Freeze protection
- Removable, raising clamp, non-strip terminals

Operational Features

- Backlit LCD with simple icon and text driven menus
- Select thermostat's default display
- Network service port via on-board mini USB connector
- Manual night set back or no occupancy override
- Multi level lockable access menu and setpoint
- Selectable Fahrenheit or Celsius scale
- 3-wire connection to controller and 4 push buttons

Network Communication

- BACnet MS/TP or Modbus communication port
- Select MAC address via DIP switch or via network
- Automatic baud rate detection

BACnet MS/TP®

- Automatic device instance configuration
- Copy & broadcast configuration via thermostat menu or via BACnet to other controllers
- BACnet scheduler
- Firmware upgradeable via BACnet
- Support for COV (change of value)

Modbus

- Modbus @ 9600, 19200, 38400 or 57600 bps
- RTU Slave, 8 bits (configurable parity and stop bits)
- Connects to any Modbus master

Controller Specifications

Description	EVCB Series
Torque	70 in.lb. [8 Nm] at rated voltage
Power consumption	10 VA max
Running time through 90º	90 seconds
Power supply	22 to 26 Vac 50/60 Hz
Inputs	2 Universal inputs (Thermistor 10KΩ Type 3, digital 24Vac/dry contact, or 0-10Vdc)
	2 digital inputs
Outputs	2 analog outputs (0-10 Vdc or 2-10Vdc; selectable)
	Up to 4 TRIAC outputs 24 Vac, 500mA max thermal fuse in series with each TRIAC output (on/off, pulse, or 2 floating outputs)
Real Time Clock	Real-time clock (RTC) with super capacitor backup (approximately 3 days)
BACnet	BACnet® MS/TP @ 9600, 19200, 38400 or 76800 bps (BAS-C)
Modbus	Modbus RTU slave @ 9600, 19200, 38400 or 57600. Selectable parity and stop bit configuration: No parity, 2 stop bit Even parity, 1 stop bit Odd parity, 1 stop bit
Communication connection	Low capacitance, EIA RS-485, 22 or 24 AWG shielded twisted pair multi-strand cables (Belden 9841 or equivalent).
Thermostat connection	Insulated 3 core multi-strand 22 or 24 AWG cable. Maximum 50ft (15m) between controller and thermostat.
Electrical connection	Insulated 2 core 0.8 mm^2 [18 AWG] minimum power cable.
Operating temperature	0ºC to 50ºC [32ºF to 122ºF]
Storage temperature	-30ºC to 50ºC [-22ºF to 122ºF]
Relative Humidity	5 to 95% non condensing
Weight	1.26 kg. [2.8 lb]

The actuator performs an auto-stroke on power up. When changing the actuator adjustment screws, cycle power to initiate the auto-stroke. Auto-stroke is not available on EVC pressure independent without feedback.

Thermostat Specifications

Description	TRL54
Sensor	Temperature
Setpoint range	10ºC to 40ºC [50ºF to 104ºF]
Control accuracy	±0.5ºC [0.9ºF] @ 22ºC [71.6ºF] typical calibrated
Display resolution	±0.1ºC [0.2ºF]
Electrical connection	3 wires to EVCB controller and 2 wires to BACnet/Modbus network | 0.8 mm^2 [18 AWG] minimum. Maximum 50ft (15m) between controller and thermostat
Network service port	Mini USB connector
Power supply	24Vac or 24Vdc
Power consumption	1VA
Operating temperature	0ºC to 50ºC [32ºF to 122ºF]
Storage temperature	-30ºC to 50ºC [-22ºF to 122ºF]
Relative humidity	5 to 95 % non condensing
Enclosure protection	IP 30 (EN 60529)
Weight	0.1 kg. [0.22 lb]
Dimensions	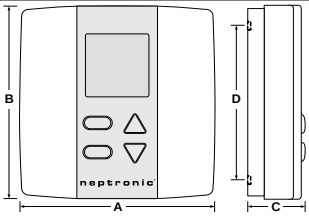 A = 3.00 in (78mm) B = 3.00 in (78mm) C = 1.00 in (24mm) D = 2.36 in (60mm)
Note	The thermostat functions only with the EVCB Series controller. All the inputs/outputs are located on the EVCB Series except for the temperature sensor built-in the thermostat.

TRL54 Interface

A	*Cooling ON A: Automatic*		*Programming mode (Technician setting)*		*Alarm status*
A	*Heating ON A: Automatic*		*Menu set-up Lock*		*Energy saving mode*
MIN MAX	*Minimum/Maximum*	°C or °F	*ºC: Celsius scale ºF: Fahrenheit scale*		

Dimensions

EVC with a built-in 70 in. lb. Actuator

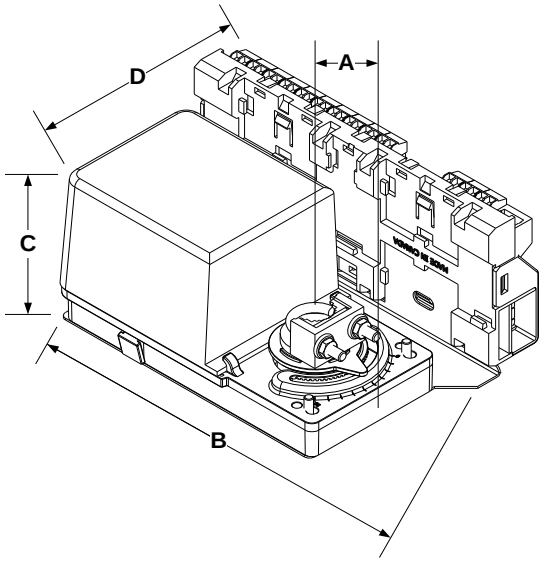

A = 1.50" | 39mm
B = 7.25" | 185mm
C = 3.25" | 83mm
D = 5.50" | 140mm

EVC with a separate 180 in. lb. Actuator

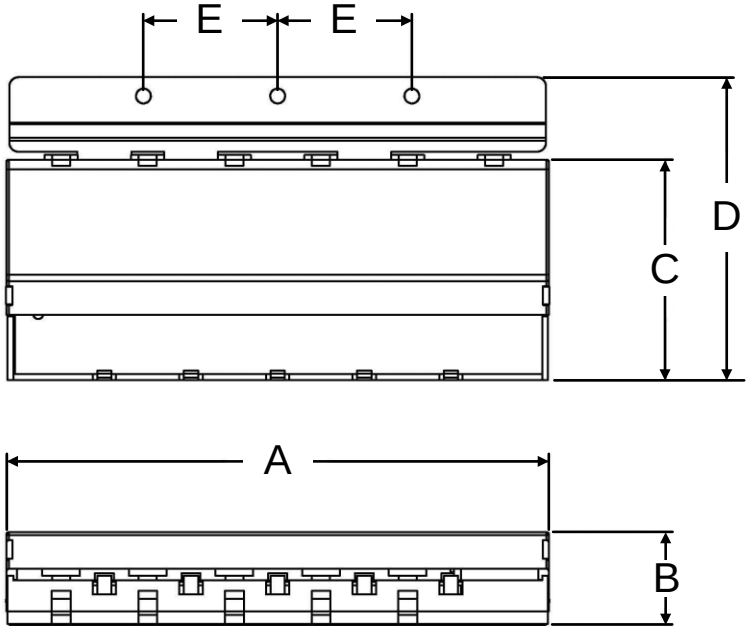

A = 7.20” | 183mm
B = 1.23” | 31mm
C = 2.93” | 74mm
D = 4.02” | 102mm
E = 1.78” | 45mm

Mechanical Installation

1. Manually close the damper blades and position the actuator to 0º or 90º.
2. Slide the actuator onto the shaft.
3. Tighten the nuts on the “U” bolt to the shaft with an 8mm wrench to a torque of 60 in-lb [6.7 Nm].
4. Slide the mounting bracket under the actuator. Ensure free movement of the slot at the base of the actuator. Place the bracket pin at mid distance of the slot.
5. Affix the bracket to the ductwork with #8 self-tapping screws.

Do not press the clutch when the actuator is powered.

EVC with a built-in 70 in. lb. Actuator

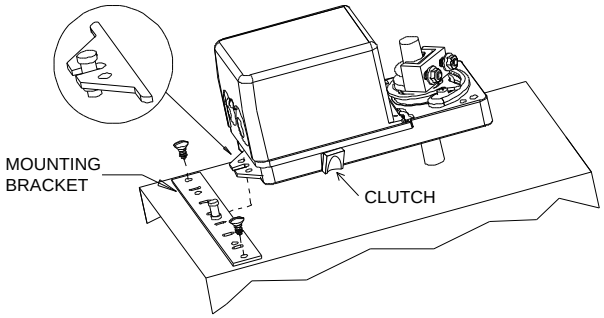

1. Manually close the damper blades and position the actuator to 0º or 90º.
2. Slide the actuator onto the shaft.
3. Tighten the nuts on the “U” bolt to the shaft with an 8mm wrench to a torque of 150 in.lb. [17 Nm].
4. Slide the mounting bracket under the actuator. Ensure free movement of the slot at the base of the actuator. Place the bracket pin at mid distance of the slot.
5. Affix the bracket to the ductwork with #8 self-tapping screws.
6. Connect the cable from the EVC to the terminal in the actuator as shown.

Do not press the clutch when the actuator is powered.

EVC with a separate 180 in. lb. Actuator

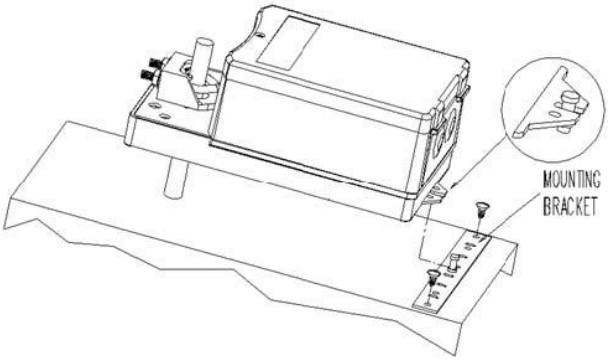

Terminals on the Actuator

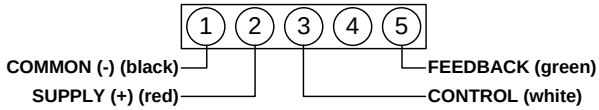

Signal cable from EVC controller (models EVCB14NIT4X and EVCB14NDT4X)

Use to connect the external motor on EVCB14NIT4X and EVCB14NDT4X.

Green: **Feedback**
White: **Control**
Red: **24Vac**
Black: **Common**

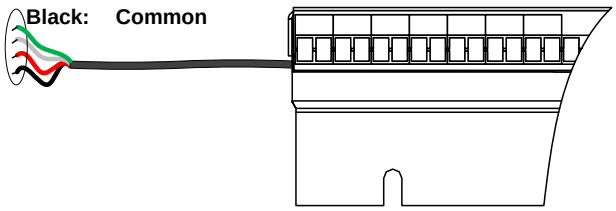

Mounting Instructions

CAUTION: Remove power to avoid a risk of malfunction.

A. Remove the captive screw that's holding the base and the front cover of the unit together.
B. Lift the front cover of the unit to separate it from the base.
C. Pull all wires through the holes in the base.
D. Secure the base to the wall using wall anchors and screws (supplied). Make the appropriate connections.
E. Mount the control module on the base and secure using the screw.

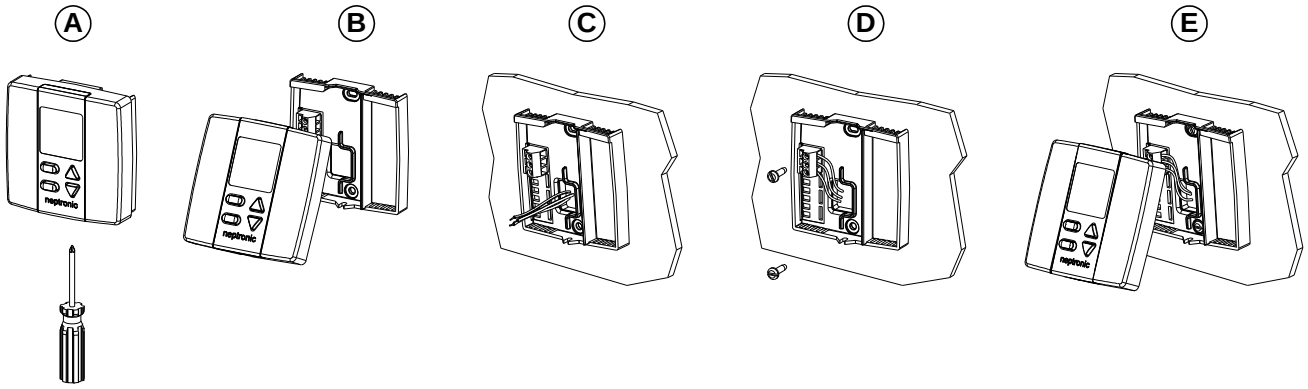

BACnet or Modbus Address DIP Switch (DS1)

MAC address for communication, are selectable by DIP switch using binary logic. If you do not change device instance in program mode, it will be automatically modified according to the MAC address.

Note: Avoid using addresses above 246 when selecting Modbus MAC address.

MAC Address	DS.1 = 1	DS.2 = 2	DS.3 = 4	DS.4 = 8	DS.5 = 16	DS.6 = 32	DS.7 = 64	DS.8 = 128	Default Device Instance
0	OFF	OFF	OFF	OFF	OFF	OFF	OFF	OFF	153000
1	ON	OFF	OFF	OFF	OFF	OFF	OFF	OFF	153001
2	OFF	ON	OFF	OFF	OFF	OFF	OFF	OFF	153002
3	ON	ON	OFF	OFF	OFF	OFF	OFF	OFF	153003
4	OFF	OFF	ON	OFF	OFF	OFF	OFF	OFF	153004
…	…	…	…	…	…	…	…	…	…
126	OFF	ON	ON	ON	ON	ON	ON	OFF	153126
127	ON	ON	ON	ON	ON	ON	ON	OFF	153127

** Slave addresses available by setting DS.8 to ON*

Wiring

We strongly recommend that all Neptronic products be wired to a separate grounded transformer and that transformer shall service only Neptronic products. This precaution will prevent interference with, and/or possible damage to incompatible equipment.

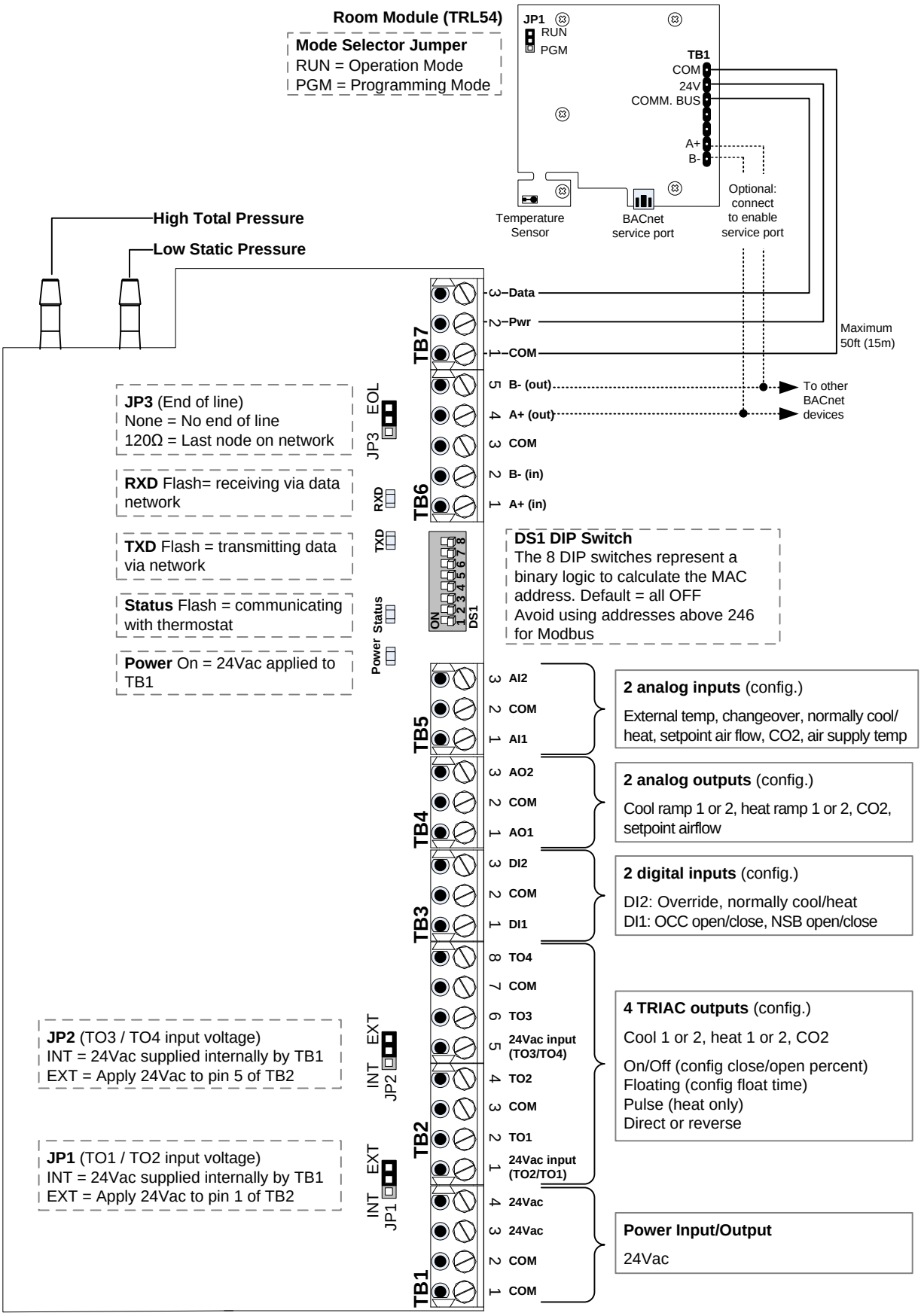

Pressure & Applications – Menu Overview (1 of 6)

For a description of the default settings for each application refer to Annex A: Control Apps on page 16.

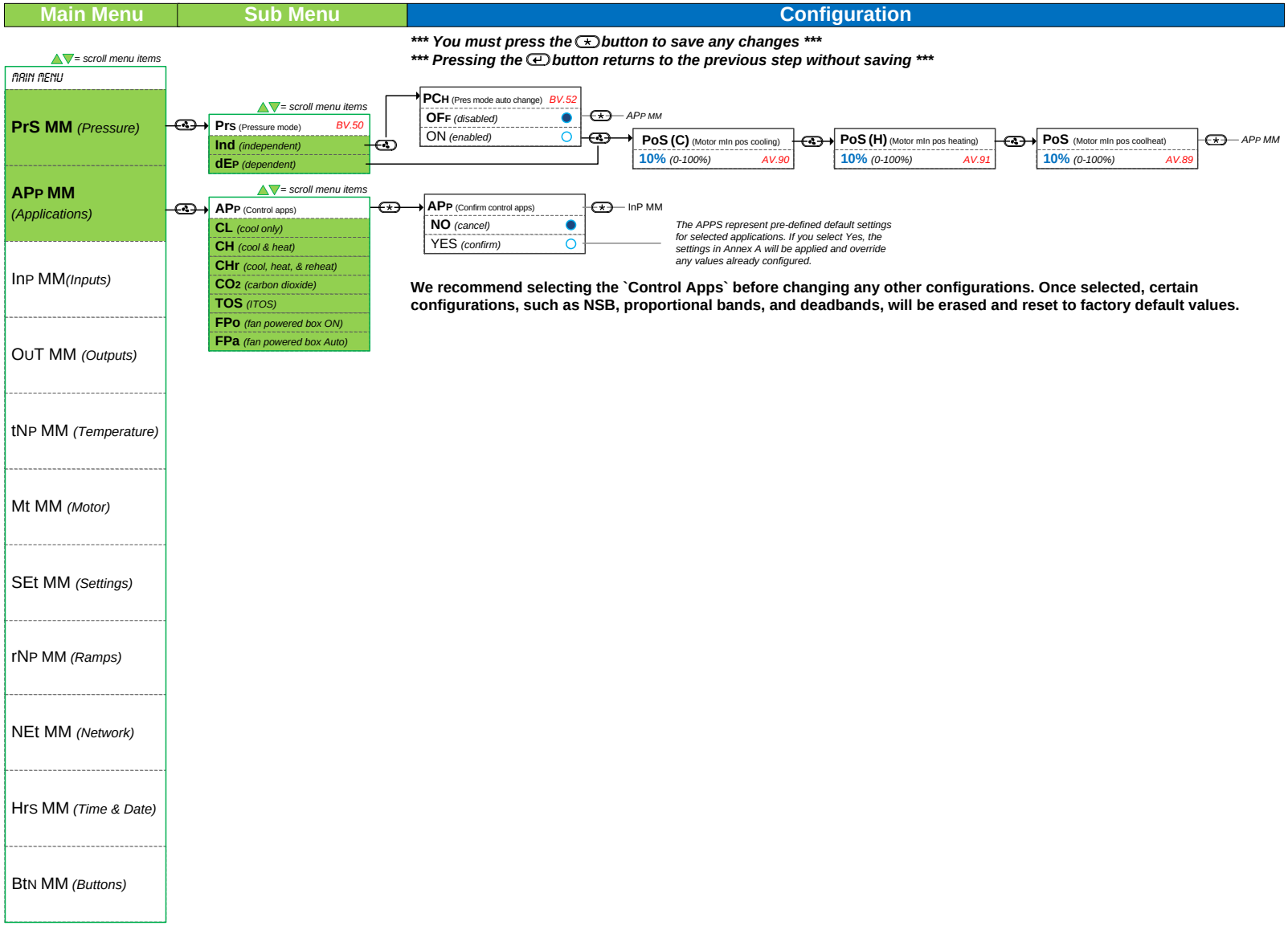

We recommend selecting the `Control Apps` before changing any other configurations. Once selected, certain configurations, such as NSB, proportional bands, and deadbands, will be erased and reset to factory default values.

Inputs – Menu Overview (2 of 6)

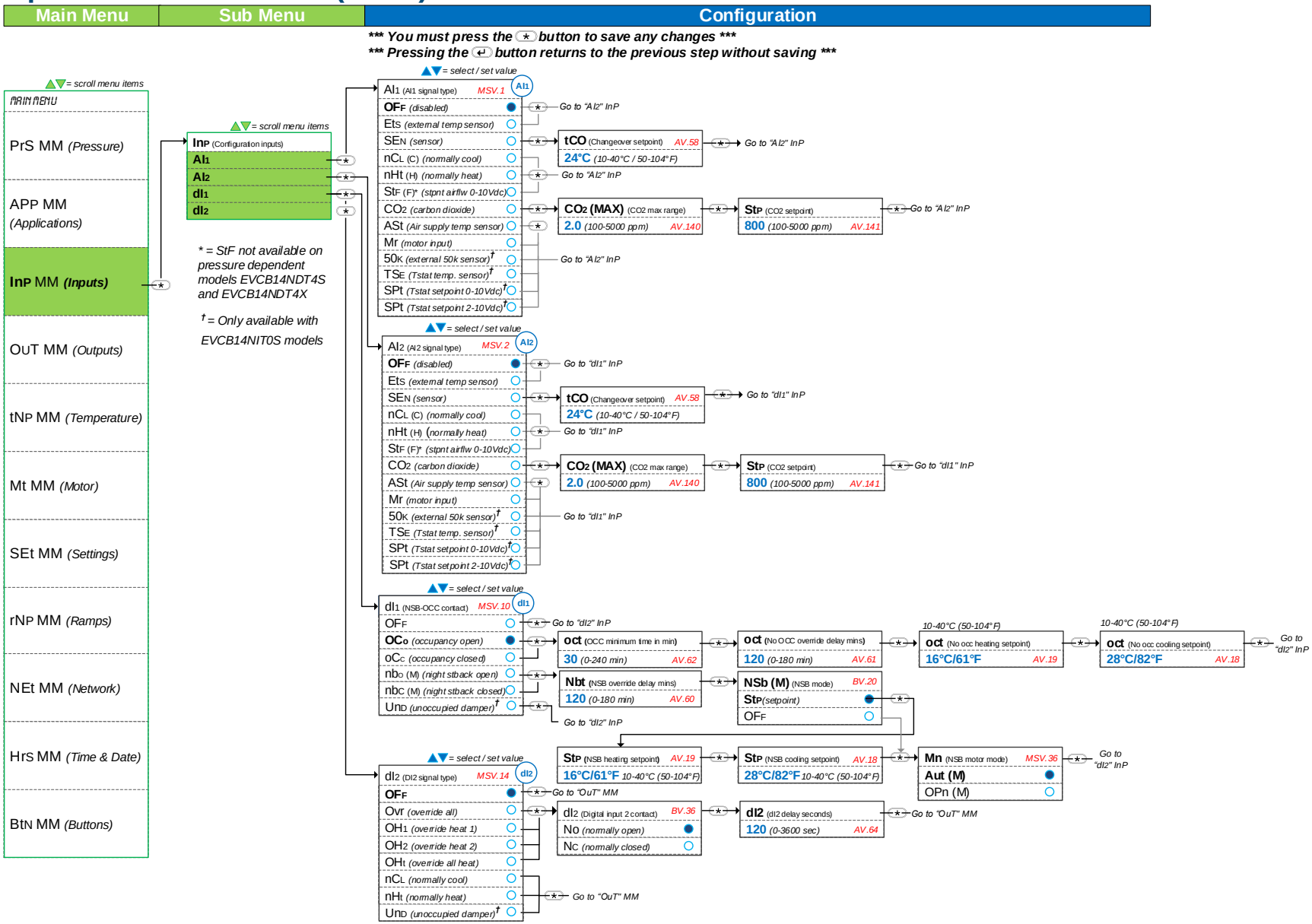

TRIAC Outputs – Menu Overview (3 of 6)

Main Menu	Sub Menu	Configuration

*** You must press the button to save any changes ***
*** Pressing the button returns to the previous step without saving ***

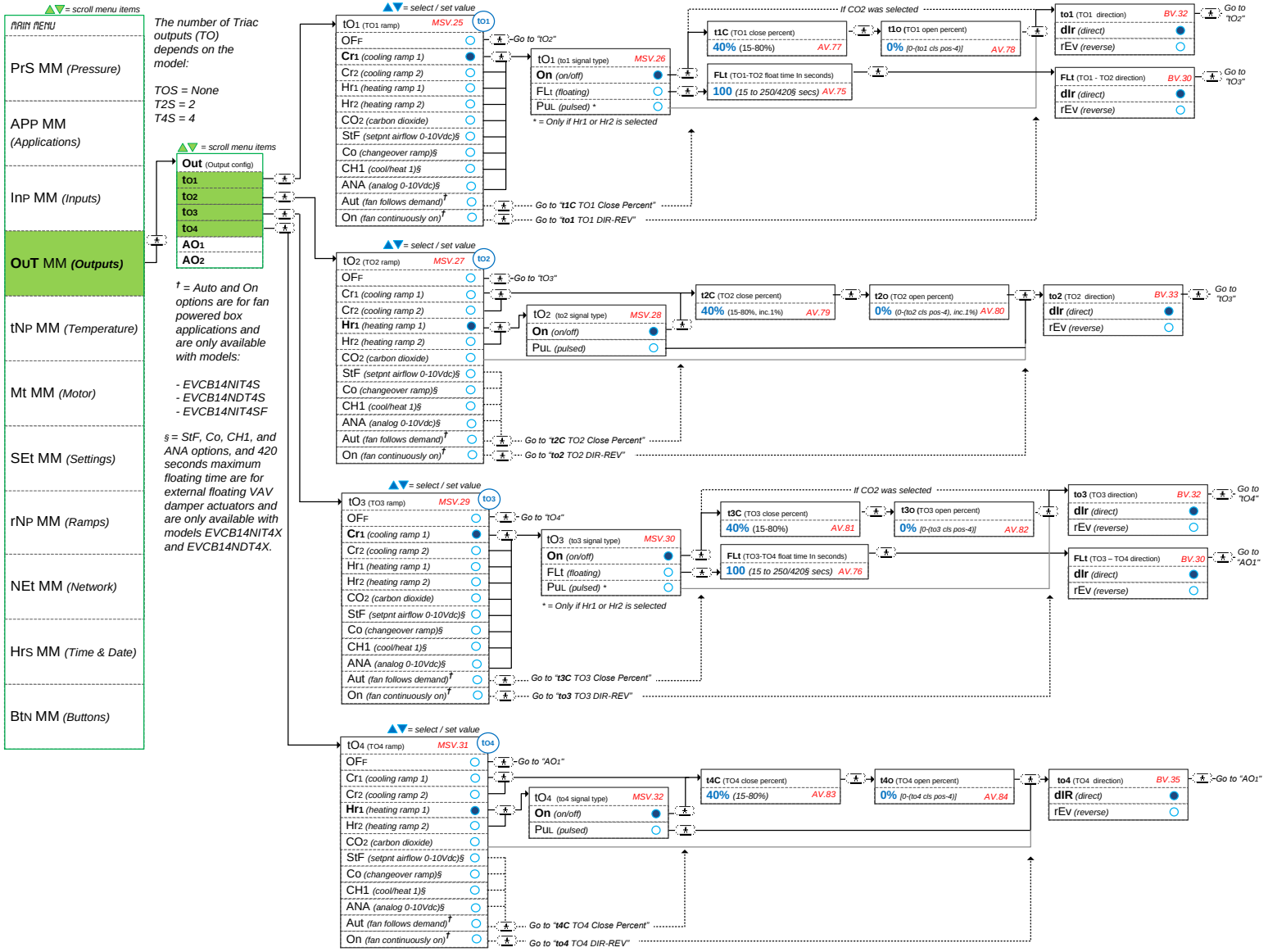

Analog Outputs – Menu Overview (4 of 6)

Main Menu	Sub Menu	Configuration

*** You must press the ✶ button to save any changes ***
*** Pressing the ↵ button returns to the previous step without saving ***

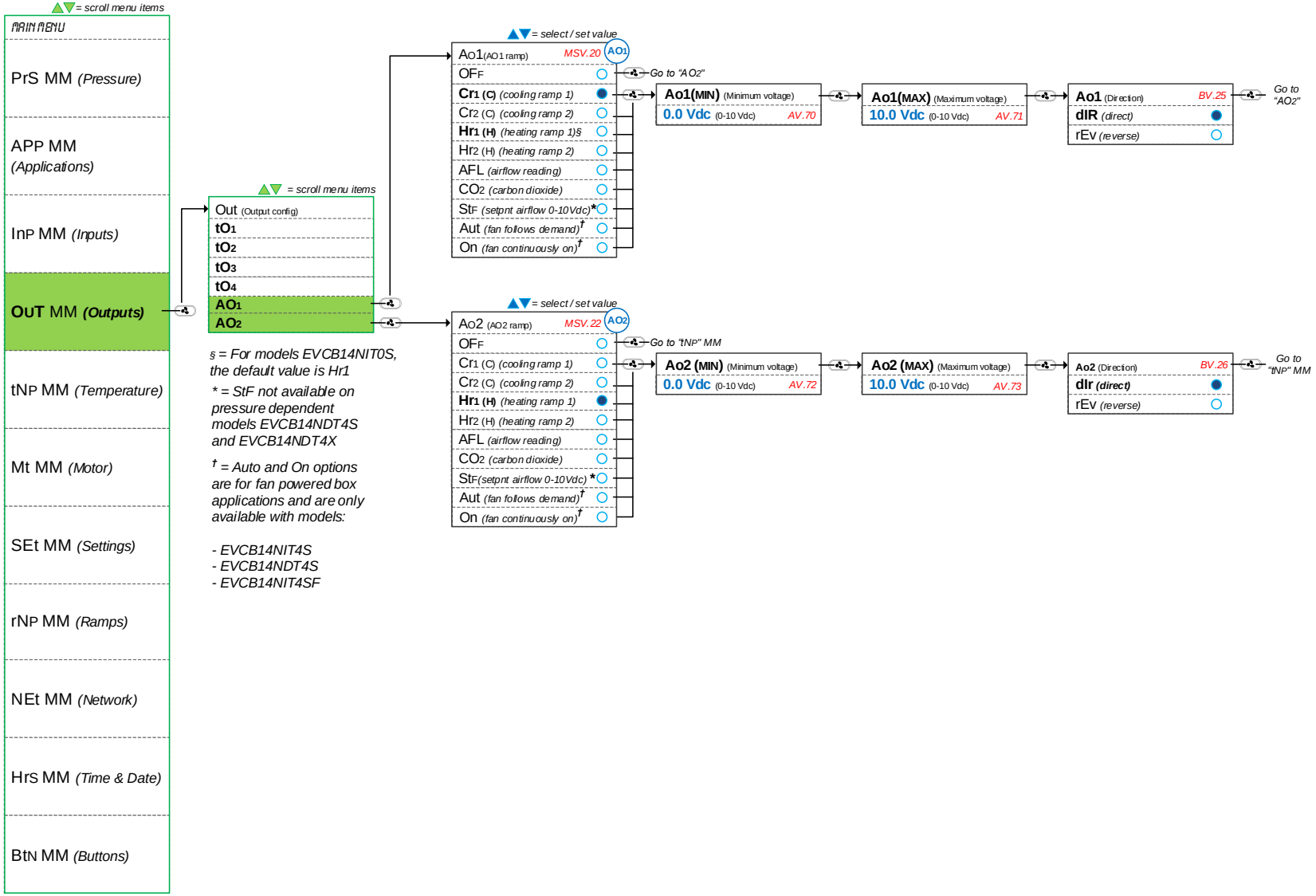

§ = For models EVCB14NIT0S, the default value is Hr1

* = StF not available on pressure dependent models EVCB14NDT4S and EVCB14NDT4X

† = Auto and On options are for fan powered box applications and are only available with models:

- EVCB14NIT4S
- EVCB14NDT4S
- EVCB14NIT4SF

Settings – Menu Overview (5 of 6)

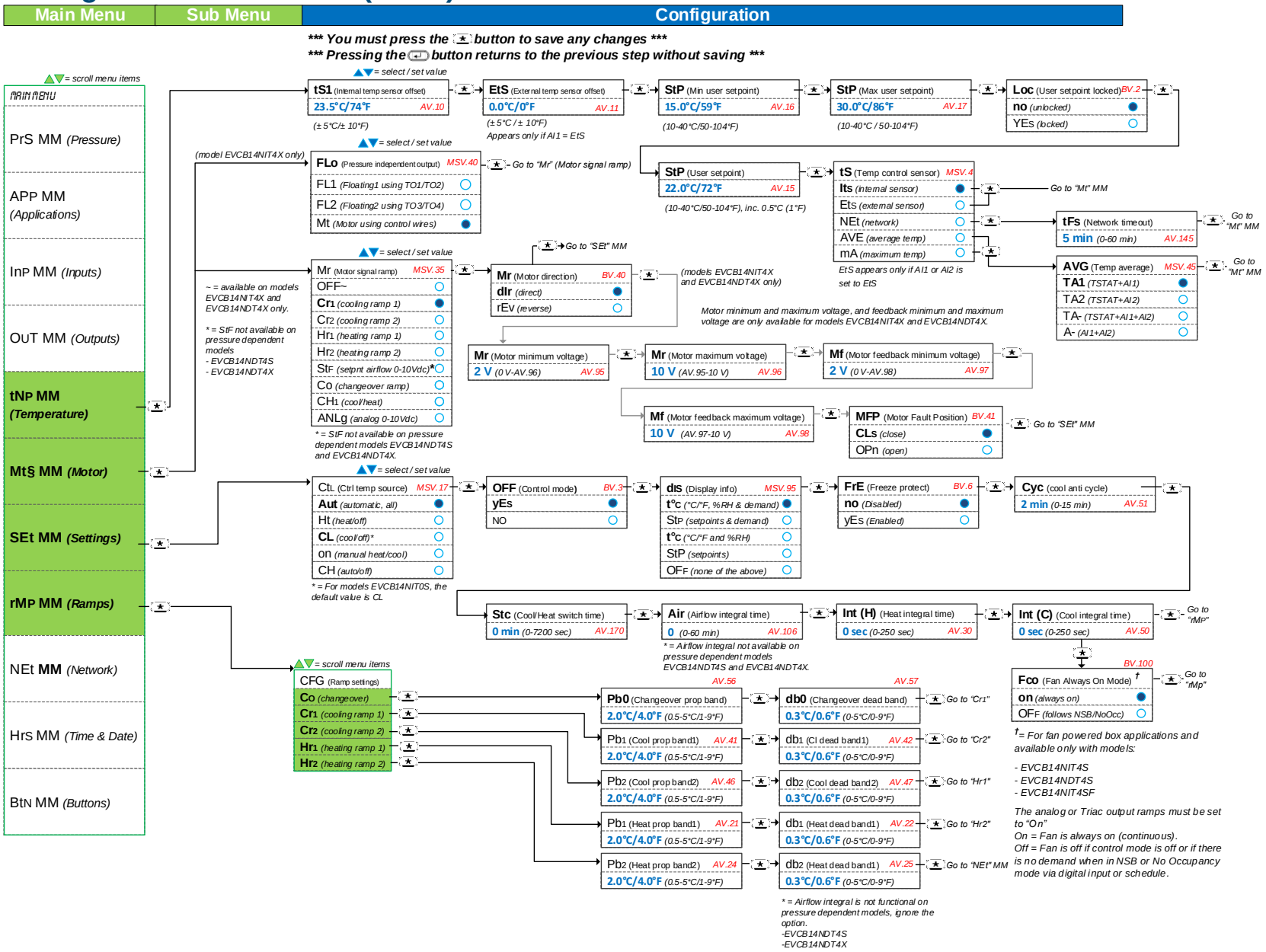

Settings – Menu Overview (6 of 6)

Main Menu	Sub Menu	Configuration

*** You must press the (*) button to save any changes ***
*** Pressing the (↵) button returns to the previous step without saving ***

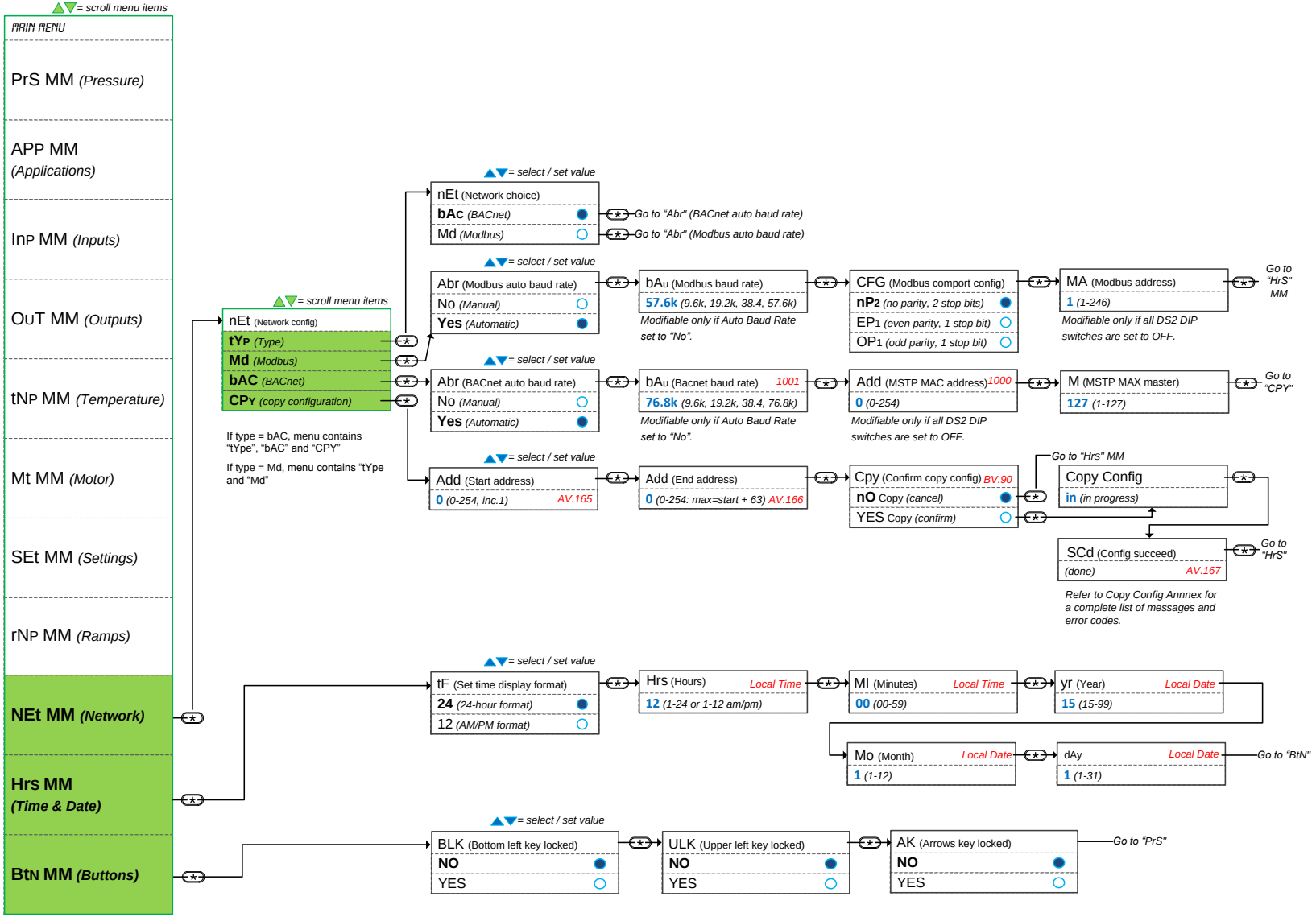

Operation Menus

This menu is accessible through normal operation mode. The Mode Selector jumper (JP1) of the thermostat must be set to the "RUN" position (Operation Mode). Refer to Wiring on page 6.

7. Press the **[*]** and **[↵]** buttons simultaneously for 5 seconds. The *"ENTER PASSWORD"* screen appears.
8. Enter the password within 1 minute by using the arrow keys to increase or decrease the value and the **[*]** and **[↵]** buttons to toggle between the digits.
   a. Password **372** = Temperature Offset Menu
   b. Password **637** = Network Settings Menu
   c. Password **757** = Airflow Balance Mode
9. If you enter the wrong password, the thermostat displays "**Eror**" and returns to Operation Mode. The thermostat will return to normal mode if you navigate through the entire menu and do not make any selection, or if you do not press any key for 5 minutes. The changed values will be saved automatically.

Menu 372 – Temperature Offset

1. *"TS1"* (temperature sensor offset)

Range: 10 to 40ºC [50 to 104ºF]
Offset: Max ± 5ºC
Increment: 0.1ºC [0.2ºF]

Compare the displayed temperature reading with a known value from a thermometer. To offset or calibrate the sensor, use the arrows key to set the desired temperature reading. This is useful for thermostats installed in areas where the temperature read is slightly different than the room's actual temperature. For example, a thermostat placed right under the air diffuser.
If the thermostat is set to use an external temperature sensor (**EtS**), the thermostat displays "OFF".

2. *"ETS"* (external temperature sensor offset)

Range: 0 to 50ºC [41 to 122ºF]
Offset: Max ± 5ºC
Increment: 0.1ºC [0.2ºF]

This option appears if you've set one of the analog inputs to **EtS** (External temperature sensor). When the thermostat is connected to the appropriate analog input, the display shows the temperature read by the external temperature sensor. Adjust the offset by comparing it with a known value (e.g. thermometer). If the sensor is not connected or short circuited, then the unit displays the sensor's limit.

3. *"PRS"* (input 3 reading)

Range: 250mV (0") to 4000mV (1")

Displays the voltage output value in mV of the pressure sensor. Does not appear for EVCB14NDT4S and EVCB14NDT4X (pressure dependant) models.

4. *"PRS MIN"* (input 3 minimum reading)

Range: 10mV to 180mV
Default: 60mV

This setting represents the deadband of the pressure sensor in mV. For advanced users or special applications only. We recommend that you use the default setting of 60mV. Does not appear for EVCB14NDT4S and EVCB14NDT4X (pressure dependant) models.

Menu 637 – Network Settings

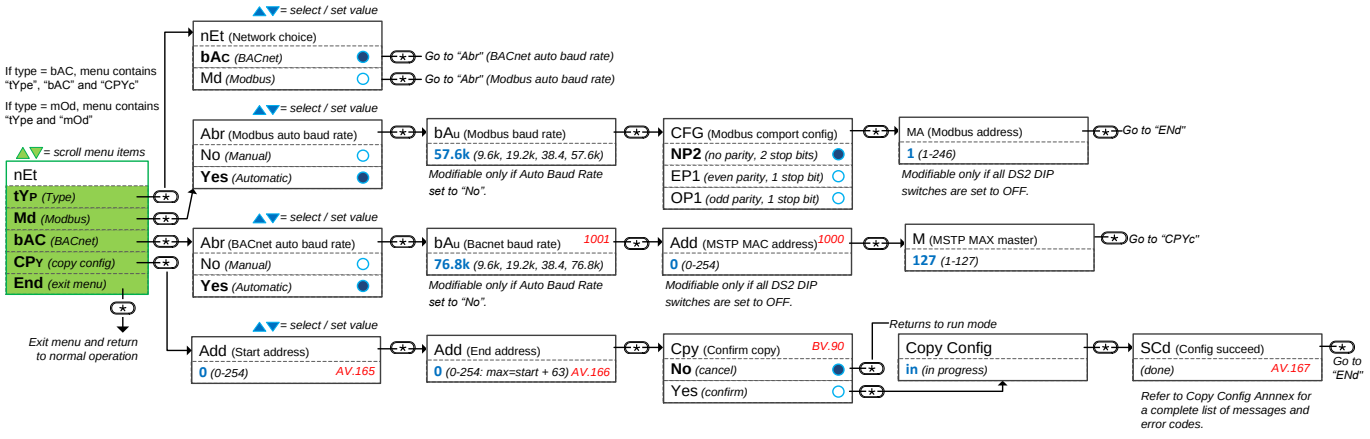

Menu 757 – Airflow Balance Mode

Pressure Independent: models EVCB14NIT0S, EVCB14NIT2S, EVCB14NIT4X and EVCB14NIT4S

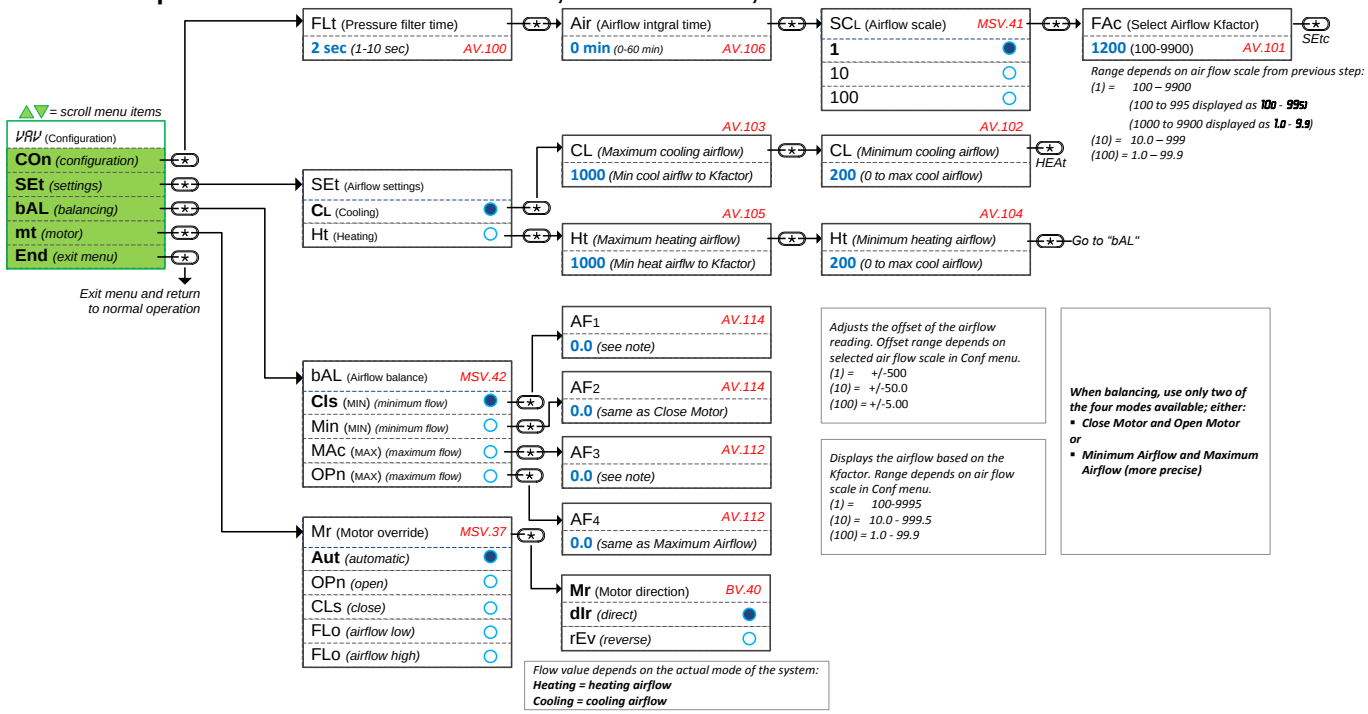

****** You must press the ⊛ button to save any changes ******
****** Pressing the ↵ button returns to the previous step without saving ******

*Note: Refer to **EVCB-Airflow Balance Instructions** on Neptronic website for further information on the airflow balancing function.*

Pressure Dependent: models EVCB14NDT4S, EVCB14NDT4X or other models if in pressure dependent mode

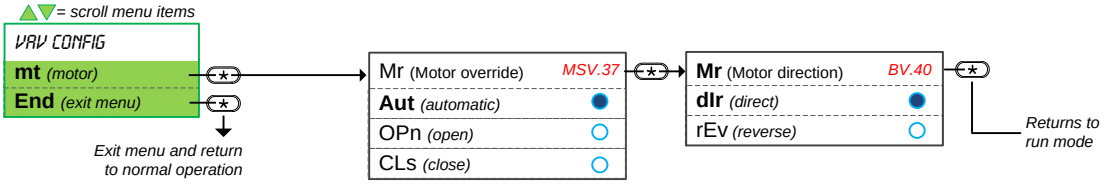

Reset to Factory Default Settings

This will erase all actual configurations and replace them with the factory default settings.

1. During the power up sequence of the thermostat, press and hold both the ↵ and ▽ buttons.
2. The *"PAS"* screen appears. Enter **372** within 1 minute by using the arrow keys to increase or decrease the value and the ⊛ and ↵ buttons to toggle between the digits.
3. Use the arrow buttons to select YES and then press ⊛.

Operation Mode

The Mode Selector Jumper (JP1) of the thermostat must be set to the "RUN" position (Operation Mode). Refer to Wiring on page 5.

Power Up

Upon power up, the LCD illuminates and all segments appear for 2 seconds. The thermostat then displays its current version of the thermostat for 2 seconds followed by the current version of the controller for 2 seconds. Pressing any key on the thermostat illuminates the LCD for 4 seconds.

Temperature

The thermostat displays the temperature reading for 8 seconds. If the sensor is disconnected or short circuited, then the unit displays the sensor's limits. To toggle the temperature scale between ºC and ºF, press the ↵ button.

Temperature Setpoint

To display the setpoint, press the △ or ▽ key twice. The set point appears for 5 seconds. To adjust the setpoint, press the arrow keys while the temperature is displayed. If the setpoint adjustment has been locked, the lock 🔒 symbol appears.

Air Flow and Air Supply Temperature*

Press and hold the ✱ button for 5 seconds and use the arrow keys to view the:

"FLO" (airflow)

"FOS" (airflow setpoint)

"OPR" (actual damper position percent)

"AST (air supply temperature).

After 5 seconds without any action, the thermostat returns to operation mode. The air supply temperature appears only if analog input AI1 or AI2 are configured with the AST option. The airflow and airflow setpoint only appear when in pressure independent mode. The actual damper position percent only appear with the following standard models: EVCB14NIT0S, EVCB14NIT2S, EVCB14NIT4S, EVCB14NDT4S, EVCB14NIT0SF, and EVCB14NIT4SF

Control Mode

To access the Control Mode, press the ✱ button. The Control Mode appears for 5 seconds. Press the ✱ button to scroll through the following control modes. These options can vary depending on the options selected in "Temp Control Mode" and "Enable OnOff Control Mode".

- Auto (Automatic Cooling or Heating)
- Cooling only (on, with cooling symbol)
- Heating only (on, with heating symbol)
- OFF (if it is not disabled in Programming Mode)

Night Set Back (NSB) or Occupancy Mode

This function is only available if you set DI1 to **nSb** (Night set back contact) or **Occ** (occupancy mode). If the DI1 contact is triggered, the thermostat enters NSB or No Occupancy Mode (the ☽ symbol appears) and uses the NSB or OCC heating and cooling setpoints.

If not locked, you can override the night set back or no occupancy mode for a predetermined period by pressing any of the 4 buttons. During the override period the ☽ symbol will flash. If the ☽ symbol does not flash, the override period is finished or the night set back or no occupancy override has been locked in programming mode.

Set Time and Date

1. Ensure that JP1 on the thermostat is set to run.
2. Press and hold the ↵ button for 5 seconds
3. Use the arrow keys to set the desired value. Press the ✱ button to save and got to the next step. Press the ↵ button to go to the previous step without saving.

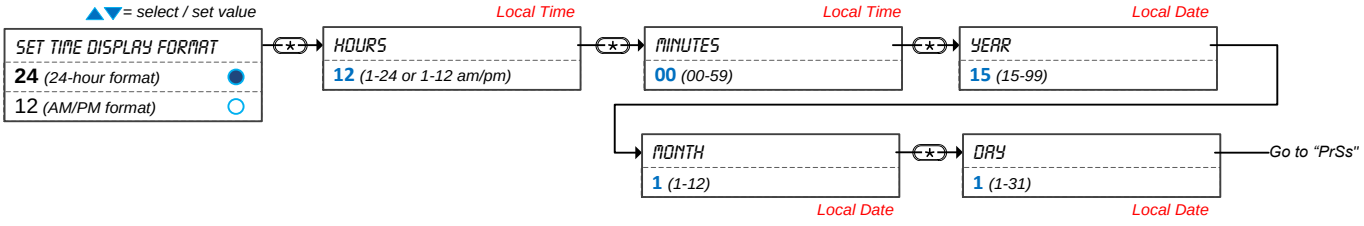

Annex A: Control Apps

Refer to Pressure & Applications – Menu Overview (1 of 6) on page 7 for more information. The available **Control Apps** vary according to the model.

Description	CL (cool only)	CLHt (cool/heat)	CHrH (cool/heat/reheat)	CO2 (CO2)	ITOS (ITOS)	FPbo (fan powered ON)	FPbA (fan powered Auto)
Min. Setpoint	**20°C (68°F)**	**20°C (68°F)**	**20°C (68°F)**	**20°C (68°F)**	15°C (59°F)	15°C (59°F)	15°C (59°F)
Max. Setpoint	**28°C (82°F)**	**28°C (82°F)**	**28°C (82°F)**	**28°C (82°F)**	30°C (86°F)	30°C (86°F)	30°C (86°F)
Changeover Setpnt	24°C (75°F)	**20°C (68°F)**	**20°C (68°F)**	**20°C (68°F)**	24°C (75°F)	24°C (75°F)	24°C (75°F)
TO1 Ramp	**HR1**	CR1	**HR1**	CR1	**OFF**	**HR1**	**HR1**
TO1 Signal Type	On/Off	On/Off	On/Off	On/Off	On/Off	On/Off	On/Off
TO1 Close Pos.	40%	40%	40%	40%	40%	**35%**	**35%**
TO1 Open Pos.	0%	0%	0%	0%	0%	0%	0%
TO2 Ramp	HR1	HR1	HR1	**CO2**	**OFF**	HR1	HR1
TO2 Signal Type	**Pulse**	On/Off	**Pulse**	On/Off	On/Off	On/Off	On/Off
TO2 Close Pos.	40%	40%	40%	40%	40%	**70%**	**70%**
TO2 Open Pos.	0%	0%	0%	0%	0%	**35%**	**35%**
TO3 Ramp	**HR2**	**CR2**	**HR2**	**HR1**	**OFF**	**Fan ON**	**Fan Auto**
TO3 Signal Type	On/Off	On/Off	On/Off	On/Off	On/Off	On/Off	On/Off
TO3 Close Pos.	40%	40%	40%	40%	40%	40%	40%
TO3 Open Pos.	0%	0%	0%	0%	0%	0%	0%
TO4 Ramp	**HR2**	**HR2**	**HR2**	**HR1**	**OFF**	**HR1**	**HR1**
TO4 Signal Type	**Pulse**	On/Off	**Pulse**	On/Off	On/Off	On/Off	On/Off
TO4 Close Pos.	40%	40%	40%	40%	40%	40%	40%
TO4 Open Pos.	0%	0%	0%	0%	0%	0%	0%
Motor Ramp	CR1	**COr**	**COr**	**COr**	CR1	CR1	**COr**
AO1 ramp	**HR1**	CR1	**HR1**	CR1	**HR1**	**HR1**	**HR1**
AO2 Ramp	**HR2**	HR1	**HR2**	HR1	**OFF**	**HR2**	**Fan Auto**
AI1 Input	OFF	**SENS**	**SENS**	**SENS**	OFF	OFF	**SENS**
AI2 Input	OFF	OFF	OFF	**CO2**	OFF	OFF	OFF
DI1 Input	**nSb.o**	**nSb.o**	**nSb.o**	Occ.o	Occ.o	**nSb.o**	**nSb.o**
Heat Prop Band 2	2°C (4°F)	2°C (4°F)	2°C (4°F)	2°C (4°F)	2°C (4°F)	**1°C (2°F)**	**1°C (2°F)**
Heat Deadband 2	**1.3°C (2.6°F)**	**1.3°C (2.6°F)**	**1.3°C (2.6°F)**	**1.3°C (2.6°F)**	0.3°C (0.6°F)	**1.3°C (2.6°F)**	**1.3°C (2.6°F)**
Cool Deadband 2	**1.3°C (2.6°F)**	**1.3°C (2.6°F)**	**1.3°C (2.6°F)**	**1.3°C (2.6°F)**	0.3°C (0.6°F)	0.3°C (0.6°F)	0.3°C (0.6°F)

Legend

Grey Text = Standard default value
Bold Text = Special default value for selected application

HR = Heating ramp
CR = Cooling ramp
COr = Changeover ramp
SENS = Changeover temperature sensor
Fan ON = Fan powered box in continuous mode
Fan Auto = Fan powered box in automatic mode (follows demand)
nSb.o = Night Set Back (normally open)
Occ.o = Occupancy mode (normally open)
TO = TRIAC output
AO = Analog output
AI = Analog input
DI = Digital input

Notes

	Recycling at end of life: please return this product to your Neptronic local distributor for recycling. If you need to find the nearest Neptronic authorized distributor, please consult **www.neptronic.com**.

400 Lebeau blvd, Montreal, Qc, H4N 1R6, Canada

www.neptronic.com

Toll free in North America: 1-800-361-2308
Tel.: (514) 333-1433
Fax: (514) 333-3163
Customer service fax: (514) 333-1091
Monday to Friday: 8:00am to 5:00pm (Eastern time)